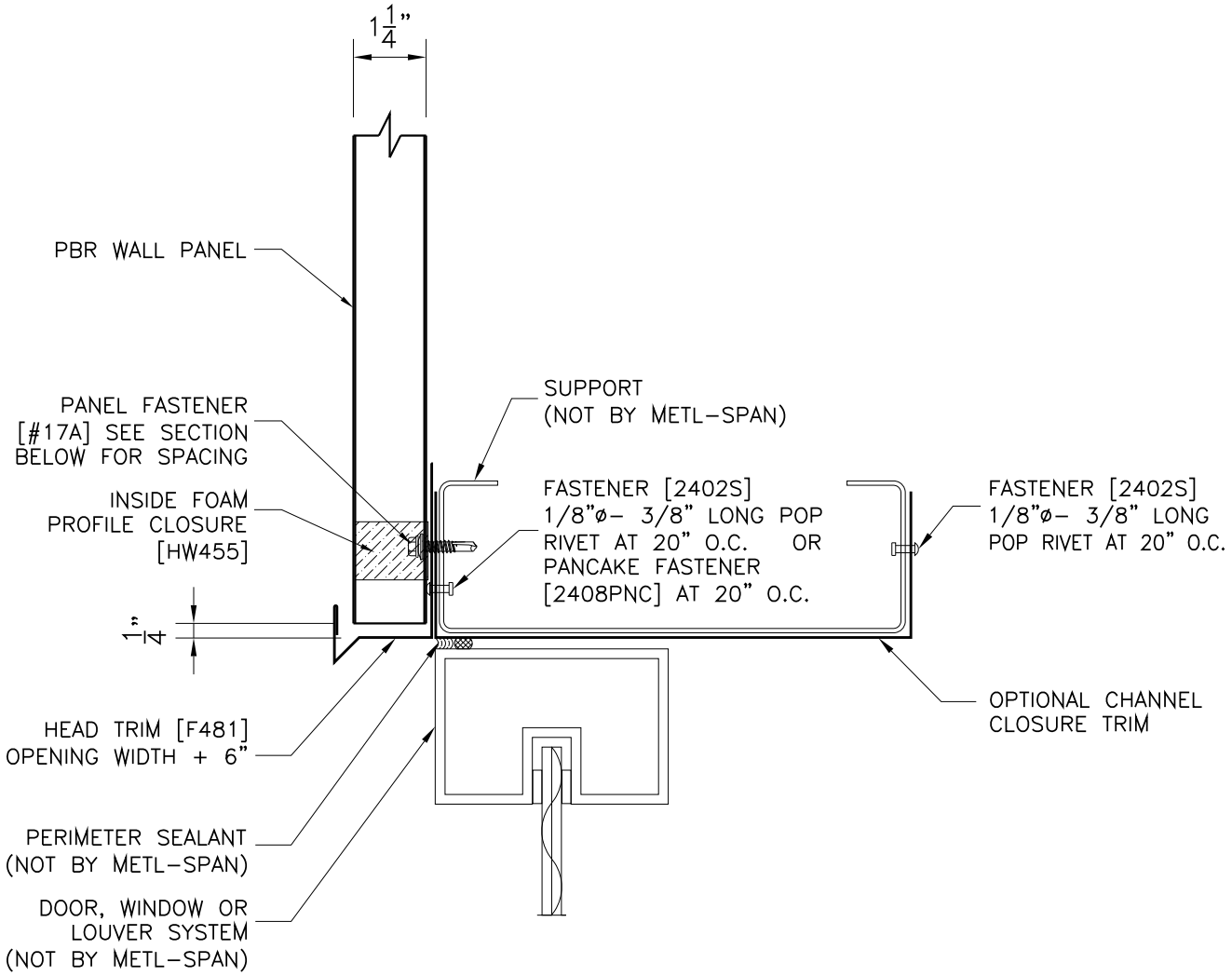

PBR HEAD DETAIL	APPLICATION: COMMERCIAL & INDUSTRIAL	PBR-HD-01 DATE: APRIL 18, 2013