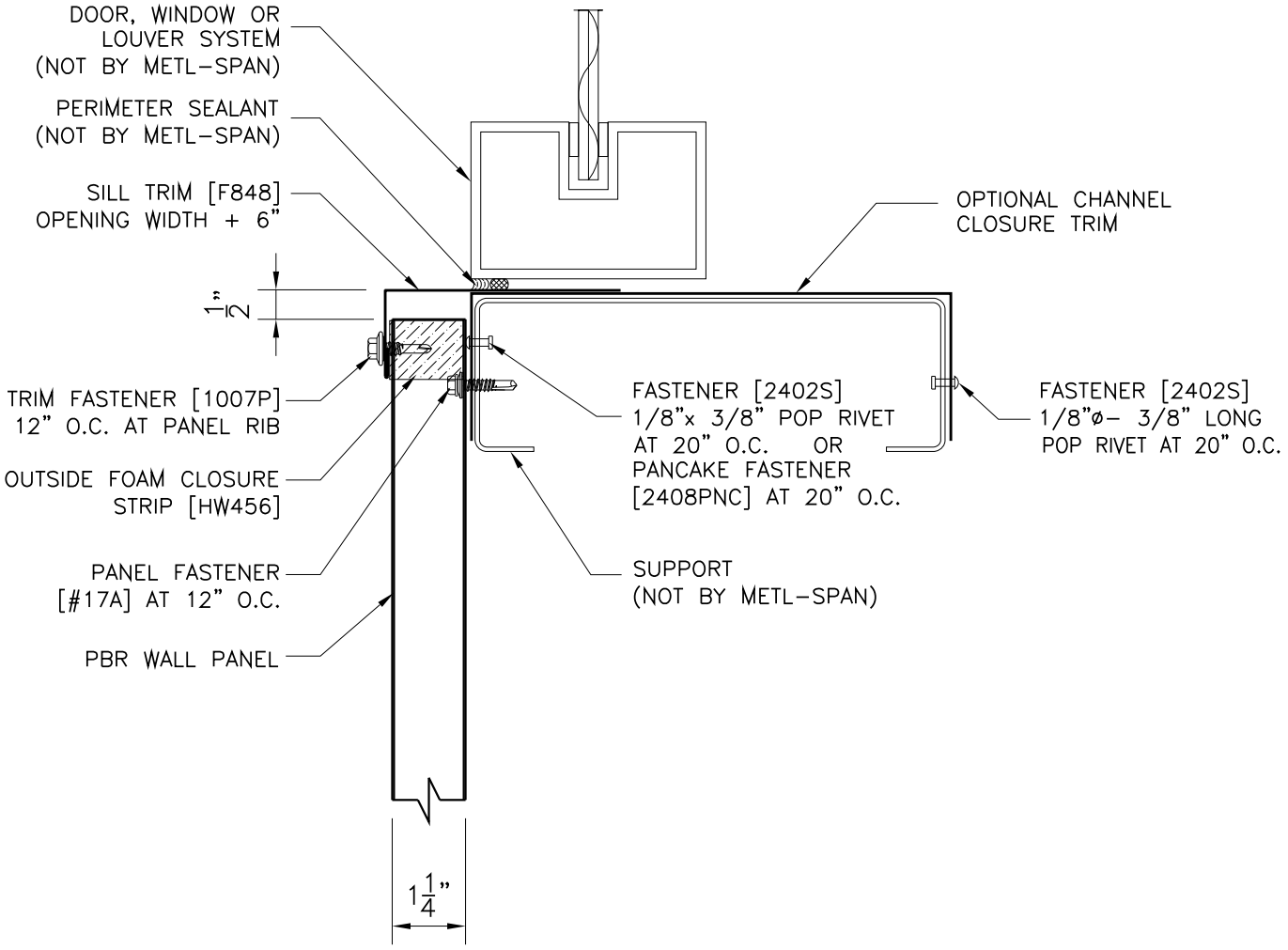

PBR SILL DETAIL	APPLICATION: COMMERCIAL & INDUSTRIAL	PBR-SL-01 DATE: APRIL 18, 2013