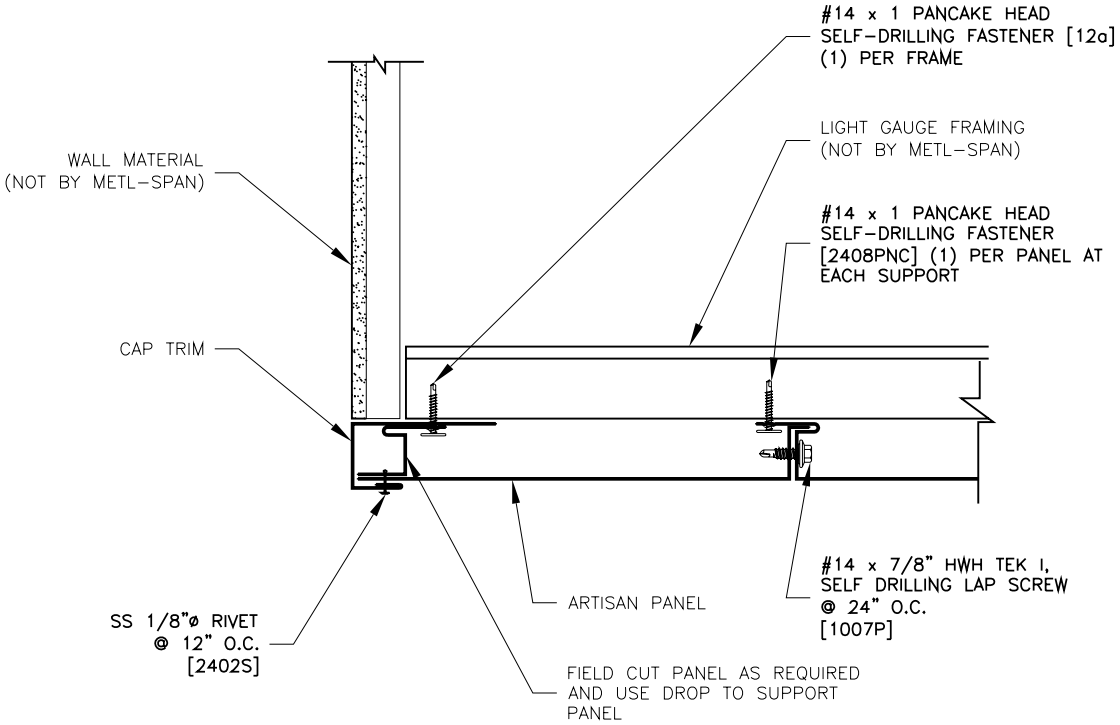


| | | |
|---|---|---|
| ARTISAN SERIES<br>FASCIA/SOFFIT | APPLICATION:<br>COMMERCIAL & INDUSTRIAL | AR-FS-04<br>DATE: MARCH 25,2013 |