MIAMI-DADE COUNTY
DEPARTMENT OF REGULATORY AND ECONOMIC RESOURCES (RER)
BOARD AND CODE ADMINISTRATION DIVISION

PRODUCT CONTROL SECTION
11805 SW 26 Street, Room 208
Miami, Florida 33175-2474
T (786) 315-2590 F (786) 315-2599
www.miamidade.gov/economy

# NOTICE OF ACCEPTANCE (NOA)

**Metl-Span, a Division of NCI Group, Inc.**
**1720 Lakepointe Drive, Suite 101**
**Lewisville, Texas 75057**

**SCOPE:**
This NOA is being issued under the applicable rules and regulations governing the use of construction materials. The documentation submitted has been reviewed and accepted by Miami-Dade County RER- Product Control Section to be used in Miami Dade County and other areas where allowed by the Authority Having Jurisdiction (AHJ).

This NOA shall not be valid after the expiration date stated below. The Miami-Dade County Product Control Section (In Miami Dade County) and/or the AHJ (in areas other than Miami Dade County) reserve the right to have this product or material tested for quality assurance purposes. If this product or material fails to perform in the accepted manner, the manufacturer will incur the expense of such testing and the AHJ may immediately revoke, modify, or suspend the use of such product or material within their jurisdiction. RER reserves the right to revoke this acceptance, if it is determined by Miami-Dade County Product Control Section that this product or material fails to meet the requirements of the applicable building code.

This product is approved as described herein, and has been designed to comply with the High Velocity Hurricane Zone of the Florida Building Code.

**DESCRIPTION: Metl-Span CF- 42 & Tuff Wall Panel**

**APPROVAL DOCUMENT:** Drawing No. C2026, titled "CF-42 & Tuff Wall Panel", sheets 1 & 2 of 2, prepared by Pala Sockalingam, P.E., dated May 11, 2015, last revision #A dated July 14, 2017, signed and sealed by Bala Sockalingam, P.E., on August 17, 2017, bearing the Miami-Dade County Product Control Renewal stamp with the Notice of Acceptance number and the expiration date by the Miami-Dade County Product Control Section.

**MISSILE IMPACT RATING: Large and Small Missile Impact Resistant**

**LABELING:** Each panel shall bear a permanent label with the manufacturer's name or logo, Lewisville, TX, Prince George, VA, North Las Vegas, NV, Shelbyville, IN, Mattoon, IL, Jackson, MS and the following statement: "Miami-Dade County Product Control Approved", unless otherwise noted herein.

**RENEWAL** of this NOA shall be considered after a renewal application has been filed and there has been no change in the applicable building code negatively affecting the performance of this product.

**TERMINATION** of this NOA will occur after the expiration date or if there has been a revision or change in the materials, use, and/or manufacture of the product or process. Misuse of this NOA as an endorsement of any product, for sales, advertising or any other purposes shall automatically terminate this NOA. Failure to comply with any section of this NOA shall be cause for termination and removal of NOA.

**ADVERTISEMENT:** The NOA number preceded by the words Miami-Dade County, Florida, and followed by the expiration date may be displayed in advertising literature. If any portion of the NOA is displayed, then it shall be done in its entirety.

**INSPECTION:** A copy of this entire NOA shall be provided to the user by the manufacturer or its distributors and shall be available for inspection at the job site at the request of the Building Official.

This NOA **renews NOA #17-0727.05** and consists of this page 1, evidence submitted pages E-1, E-2, E-3, E-4, E-5 & E-6 as well as approval document mentioned above.
The submitted documentation was reviewed by Helmy A. Makar, P.E., M.S.

MIAMI-DADE COUNTY APPROVED

Helmy A. Makar
03/29/18

**NOA No. 18-0212.02**
**Expiration Date: 03/06/2023**
**Approval Date: 03/29/2018**

**Metl-Span, a Division of NCI Group, Inc.**

## NOTICE OF ACCEPTANCE: EVIDENCE SUBMITTED

### 1. EVIDENCE SUBMITTED UNDER PREVIOUS APPROVAL #02-1107.01

**A. DRAWINGS**

1. *Drawing No. 1180, titled " CF – 42 Wall Panel ", sheets 1 and 2 of 2, prepared by W.W. Schaefer Engineering & Consulting, P.A., dated October 31, 2002, signed and sealed by Warren W. Schaefer, P.E.*

**B. TESTS**

1. *Test report on Large Missile Impact Test, Cyclic Wind Pressure Test and Uniform Static Air Pressure Test on Metl-Span CF – 42 Wall Panel System, prepared by Hurricane Test Laboratory, Inc., Report No. 0308-0708-02, dated October 04, 2002, signed and sealed by Vinu J. Abraham, P.E.*

**C. CALCULATIONS**

1. *Calculations titled "Metl-Span CF – 42 Wall Panel System", dated October 30, 2002, pages 1 through 3 of 3, prepared by W.W. Schaefer Engineering & Consulting, P.A., signed and sealed by Warren W. Schaefer, P.E. on November 01, 2002.*
2. *Calculations titled "Metl-Span CF – 42 Wall Panel System", dated October 30, 2002, pages 1 through 3 of 3, prepared by W.W. Schaefer Engineering & Consulting, P.A., signed and sealed by Warren W. Schaefer, P.E. on February 06, 2003.*

**D. MATERIAL CERTIFICATIONS**

1. *Tensile Test Report No. 21M-1066, prepared by QC Metallurgical, Inc., dated September 25, 2002, signed and sealed by Frank E. Grate, P.E.*

### 2. EVIDENCE SUBMITTED UNDER PREVIOUS APPROVAL # 05-0118.02

**A. DRAWINGS**

1. *Drawing No. 1180, titled " CF – 42 & Tuff Wall Panel ", sheets 1 and 2 of 2, prepared by W.W. Schaefer Engineering & Consulting, P.A., dated 10/31/2002, latest revision A1, dated 01/13/05 signed and sealed by Warren W. Schaefer, P.E.*

**B. TESTS**

1. *Test report on Surface Burning Characteristics, on Metl-Span Tuff Wall Panel System, prepared by Omega Point Laboratories, Report No. 16982-120565, dated August 30, 2004, signed and sealed by John W. Dougherty, P.E.*

**C. CALCULATIONS**

1. *None.*

**D. QUALITY ASSURANCE**

1. *By Miami-Dade County Building Code Compliance Office.*

**Helmy A. Makar, P.E., M.S.**
**Product Control Section Supervisor**
**NOA No. 18-0212.02**
**Expiration Date: 03/06/2023**
**Approval Date: 03/29/2018**

**E. MATERIAL CERTIFICATIONS**

1. *Tensile Test Report No. 21M-1066, prepared by QC Metallurgical, Inc., dated September 25, 2002, signed and sealed by Frank E. Grate, P.E.*

**3. EVIDENCE SUBMITTED UNDER PREVIOUS APPROVAL # 05-0830.03**

**A. DRAWINGS**

1. *Drawing No. C1409, titled " CF – 42 & Tuff Wall Panel ", sheets 1 and 2 of 2, prepared by Bala Sockalingam, Ph.D., P.E., dated August 19, 2005, latest revision A, dated April 17, 2006, signed and sealed by Pala Sockalingam, P.E.*

**B. TESTS**

1. *None.*

**C. CALCULATIONS**

1. *Calculations titled "Metl-Span CF – 42 Wall Panel System", dated August 20, 2005, 8 pages, prepared by Bala Sockalingam, Ph.D., P.E., signed and sealed by Bala Sockalingam, P.E.*

**D. QUALITY ASSURANCE**

1. *By Miami-Dade County Building Code Compliance Office.*

**E. MATERIAL CERTIFICATIONS**

1. *None.*

**4. EVIDENCE SUBMITTED UNDER PREVIOUS APPROVAL #08-0206.08**

**A. DRAWINGS**

1. *None.*

**B. TESTS**

1. *None.*

**C. CALCULATIONS**

1. *None.*

**D. QUALITY ASSURANCE**

1. *By Miami-Dade County Building Code Compliance Office.*

**E. MATERIAL CERTIFICATIONS**

1. *None.*

**Helmy A. Makar, P.E., M.S.**
**Product Control Section Supervisor**
**NOA No. 18-0212.02**
**Expiration Date: 03/06/2023**
**Approval Date: 03/29/2018**

## NOTICE OF ACCEPTANCE: EVIDENCE SUBMITTED

**5. EVIDENCE SUBMITTED UNDER PREVIOUS APPROVAL #08-0929.01**

**A. DRAWINGS**

1. *Drawing No. C1409, titled " CF – 42 & Tuff Wall Panel ", sheets 1 and 2 of 2, prepared by Bala Sockalingam, P.E., dated August 19, 2005, latest revision B, dated September 15, 2008, signed and sealed by Bala Sockalingam, P.E., on February 17, 2009.*

**B. TESTS**

1. *None.*

**C. CALCULATIONS**

1. *None.*

**D. QUALITY ASSURANCE**

1. *By Miami-Dade County Building Code Compliance Office.*

**E. MATERIAL CERTIFICATIONS**

1. *None.*

**6. EVIDENCE SUBMITTED UNDER PREVIOUS APPROVAL # 11-1013.02**

**A. DRAWINGS**

1. *Drawing No. C1409, titled "CF-42 & Tuff Wall Panel", sheets 1 & 2 of 2, prepared by Pala Sockalingam, P.E., dated August 19, 2005, latest revision C, dated November 29, 2011, signed and sealed by Bala Sockalingam, P.E., on November 30, 2011.*

**B. TESTS**

1. *None.*

**C. CALCULATIONS**

1. *None.*

**D. QUALITY ASSURANCE**

1. *By Miami-Dade County Department of Permitting, Environment, and Regulatory Affairs (PERA).*

**E. MATERIAL CERTIFICATIONS**

1. *None.*

**Helmy A. Makar, P.E., M.S.**
**Product Control Section Supervisor**
**NOA No. 18-0212.02**
**Expiration Date: 03/06/2023**
**Approval Date: 03/29/2018**

## NOTICE OF ACCEPTANCE: EVIDENCE SUBMITTED

**7. EVIDENCE SUBMITTED UNDER PREVIOUS APPROVAL # 13-0212.06**

**A. DRAWINGS**

1. *Drawing No. C1409, titled "CF-42 & Tuff Wall Panel", sheets 1 & 2 of 2, prepared by Pala Sockalingam, P.E., dated August 19, 2005, latest revision D, dated February 01, 2013, signed and sealed by Bala Sockalingam, P.E., on February 04, 2013.*

**B. TESTS**

1. *None.*

**C. CALCULATIONS**

1. *None.*

**D. QUALITY ASSURANCE**

1. *By Miami-Dade County Department of Regulatory and Economic Resources.*

**E. MATERIAL CERTIFICATIONS**

1. *None.*

**8. EVIDENCE SUBMITTED UNDER PREVIOUS APPROVAL # 13-1105.11**

**A. DRAWINGS**

1. *Drawing No. C1933, titled "CF-42 & Tuff Wall Panel", sheets 1 & 2 of 2, prepared by Bala Sockalingam, P.E., dated September 12, 2013, latest revision A, dated May 15, 2014, signed and sealed by Pala Sockalingam, P.E., on May 16, 2014.*

**B. TESTS**

1. *Test report on Large Missile Impact Test, Cyclic Wind Pressure Test and Uniform Static Air Pressure Test on Metl-Span CF – 42 Wall Panel System, prepared by Architectural Testing, Report No. C2506.01-801-18, Revision 3, dated July 29, 2013, signed and sealed by Vinu J. Abraham, P.E.*

**C. CALCULATIONS**

1. *Calculations titled "Metl-Span CF – 42 Wall Panel System", dated October 15, 2013, 3 pages, prepared, signed and sealed by Bala Sockalingam, P.E.*

**D. QUALITY ASSURANCE**

1. *By Miami-Dade County Department of Regulatory and Economic Resources.*

**E. MATERIAL CERTIFICATIONS**

1. *None.*

**Helmy A. Makar, P.E., M.S.**
**Product Control Section Supervisor**
**NOA No. 18-0212.02**
**Expiration Date: 03/06/2023**
**Approval Date: 03/29/2018**

## NOTICE OF ACCEPTANCE: EVIDENCE SUBMITTED

**9. EVIDENCE SUBMITTED UNDER PREVIOUS APPROVAL # 15-0224.02**

**A. DRAWINGS**

1. *Drawing No. C1994, titled "CF-42 & Tuff Wall Panel", sheets 1 & 2 of 2, prepared by Pala Sockalingam, P.E., dated February 10, 2015, signed and sealed by Bala Sockalingam, P.E., on February 11, 2015.*

**B. TESTS**

1. *Test report on Bulb-Tite Rivets 9/32" rivets and 5/16" Fab-Lok Expansion Fasteners for Metl-Span CF – 42 Wall Panel System, prepared by Farabaugh Engineering and Testing Inc., Report No. T351-14, dated January 20, 2015, signed and sealed by Daniel G. Farabaugh, P.E.*

**C. CALCULATIONS**

1. *Calculations titled "Revision to Metl-Span CF and Tuff Wall Panels NOA 13-1105.11", dated February 11, 2015, 2 pages, prepared, signed and sealed by Bala Sockalingam, P.E.*

**D. QUALITY ASSURANCE**

1. *By Miami-Dade County Department of Regulatory and Economic Resources.*

**E. MATERIAL CERTIFICATIONS**

1. *None.*

**10. EVIDENCE SUBMITTED UNDER PREVIOUS APPROVAL # 15-0528.07**

**A. DRAWINGS**

1. *Drawing No. C2026, titled "CF-42 & Tuff Wall Panel", sheets 1 & 2 of 2, prepared by Pala Sockalingam, P.E., dated May 11, 2015, signed and sealed by Bala Sockalingam, P.E., on August 04, 2015.*

**B. TESTS**

1. *None.*

**C. CALCULATIONS**

1. *None.*

**D. QUALITY ASSURANCE**

1. *By Miami-Dade County Department of Regulatory and Economic Resources.*

**E. MATERIAL CERTIFICATIONS**

1. *None.*

**Helmy A. Makar, P.E., M.S.**
**Product Control Section Supervisor**
**NOA No. 18-0212.02**
**Expiration Date: 03/06/2023**
**Approval Date: 03/29/2018**

## NOTICE OF ACCEPTANCE: EVIDENCE SUBMITTED

**11. EVIDENCE SUBMITTED UNDER PREVIOUS APPROVAL # 17-0727.05**

**A. DRAWINGS**

1. *Drawing No. C2026, titled "CF-42 & Tuff Wall Panel", sheets 1 & 2 of 2, prepared by Pala Sockalingam, P.E., dated May 11, 2015, last revision #A dated July 14, 2017, signed and sealed by Bala Sockalingam, P.E., on August 17, 2017.*

**B. TESTS**

1. *None.*

**C. CALCULATIONS**

1. *None.*

**D. QUALITY ASSURANCE**

1. *By Miami-Dade County Department of Regulatory and Economic Resources.*

**E. MATERIAL CERTIFICATIONS**

1. *None.*

**F. STATEMENTS**

1. *FBC, 2014 and 2017 Editions Compliance Letter prepared by Pala Sockalingam, P.E., dated 08/17/17, signed & sealed by Bala Sockalingam, P.E., on 08/17/2017.*

**12. NEW EVIDENCE SUBMITTED**

**A. DRAWINGS**

1. *None.*

**B. TESTS**

1. *None.*

**C. CALCULATIONS**

1. *None.*

**D. QUALITY ASSURANCE**

1. *By Miami-Dade County Department of Regulatory and Economic Resources.*

**E. MATERIAL CERTIFICATIONS**

1. *None.*

**F. STATEMENTS**

1. *FBC, 2014 and 2017 Editions Compliance Letter prepared by Pala Sockalingam, P.E., dated 01/18/18, signed and sealed by Bala Sockalingam, P.E., on 01/18/2018.*

**Helmy A. Makar, P.E., M.S.**
**Product Control Section Supervisor**
**NOA No. 18-0212.02**
**Expiration Date: 03/06/2023**
**Approval Date: 03/29/2018**

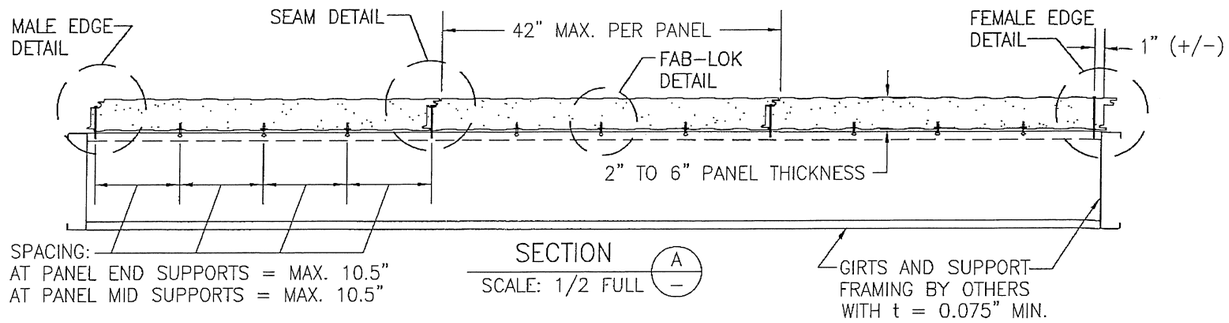


SECTION A
SCALE: 1/2 FULL

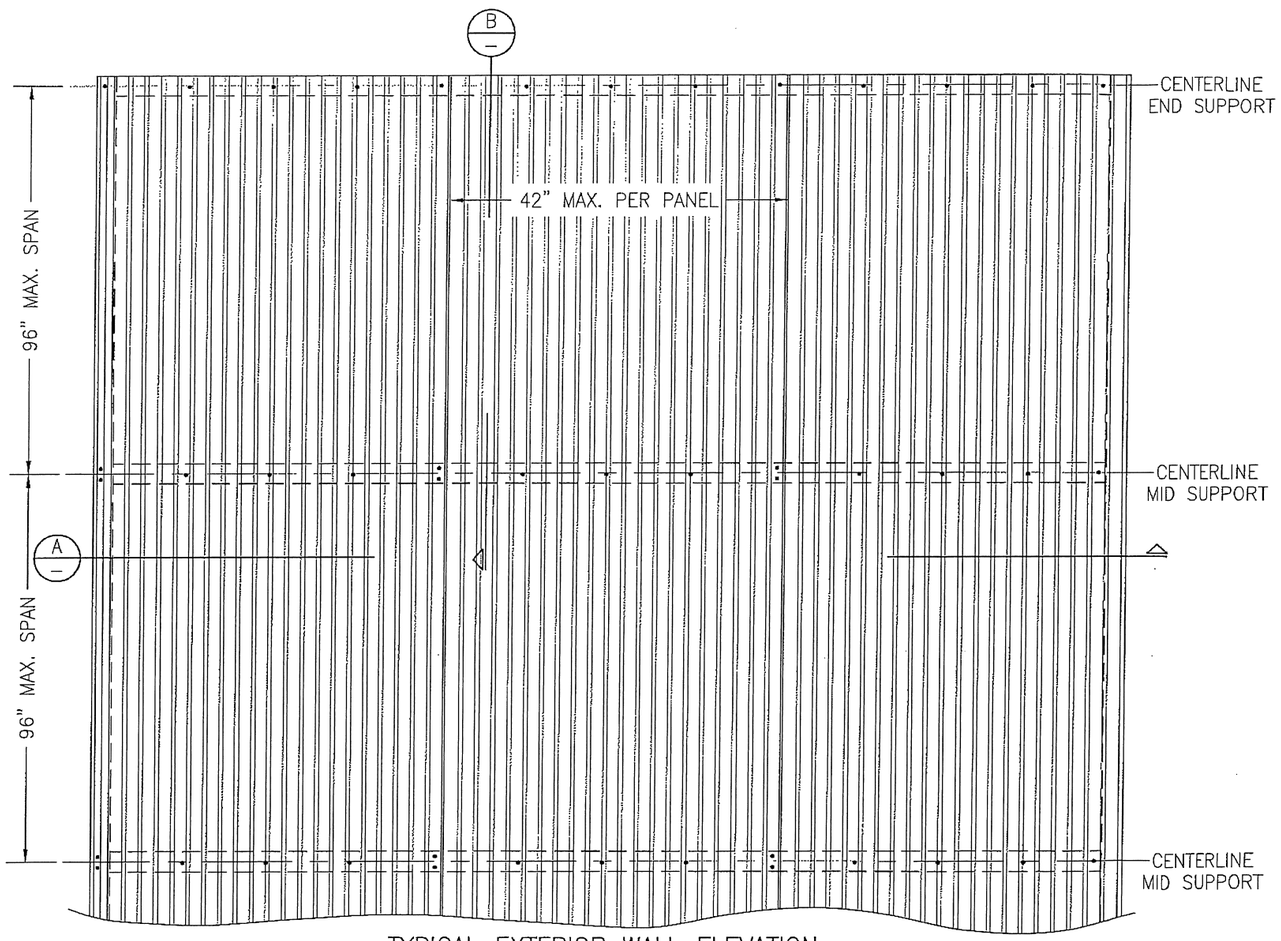


TYPICAL EXTERIOR WALL ELEVATION

PRODUCT APPROVAL IS LIMITED TO THE WALL PANEL & ITS CONNECTING CLIPS. THE STRUCTURAL ADEQUACY OF ALL OTHER STRUCTURAL ITEMS (BEAMS, COLUMNS, PURLINS, FACIA SUPPORTS, CONNECTIONS OF STRUCTURE, ETC. SHALL BE VERIFIED BY THE STRUCTURAL PLANS EXAMINER OF THE CORRESPONDING BUILDING DEPARTMENT. THE WALL PANELS SHALL NOT BE DESIGNED TO ACT AS A DIAPHRAGM.

## GENERAL NOTES:

1. THIS STRUCTURAL WALL PANEL SYSTEM HAS BEEN DESIGNED IN ACCORDANCE WITH HVHZ 2014 & 2017 FLORIDA BUILDING CODE (FBC). THE DESIGN PRESSURES AS DETERMINED FROM SECTION 1620 AND ASCE 7-10 MUST BE MULTIPLIED BY 0.6.
2. ALL WALL PANELS ARE MAX 42" WIDE, CONSIST OF EXTERIOR 26 GA. (t = 0.019" MIN.) AND INTERIOR 26 GA. (t = 0.019" MIN) G-90 CLAD STEEL SKINS (Fy = MIN. 44.5 KSI TESTED) COATED WITH AN EMBOSSED & PAINTED OR TUFF (STUCCO-LIKE) FINISH & ARE FOAM FILLED WITH FOAMED-IN-PLACE NON-CFC 2.0 LB/CU. FT. DENSITY POLYURETHANE.
3. THE WALL PANELS SHALL BE INSTALLED OVER WALL STRUCTURE AS SPECIFIED ON THESE DRAWINGS.
4. THE WALL PANELS MUST BE INSTALLED OVER MIN. 2 SUPPORTS. HORIZONTAL SEAMS MAY BE PRESENT AT CENTERLINE OF SUPPORTING GIRTS PROVIDING THE SEAMS ARE FLASHED & PROPERLY SEALED PER METL-SPAN SPECIFICATIONS AND EACH PANEL END IS SECURED PER THESE DRAWINGS.
5. REQUIRED DESIGN WIND LOADS SHALL BE DETERMINED FOR EACH PROJECT. THIS PANEL SYSTEM MAY NOT BE INSTALLED WHEN THE REQUIRED DESIGN WIND LOADS ARE GREATER THAN THE ALLOWABLE WIND LOADS SPECIFIED ON THIS DRAWING.
7. THIS WALL PANEL SYSTEM HAS BEEN TESTED AS AN IMPACT SYSTEM IN ACCORDANCE WITH PROTOCALS TAS-201, 202 & 203.
8. WALL PANEL MANUFACTURER'S PERMANENT LABEL SHALL BE PLACED AT THE END OF EACH PANEL RUN AND SHALL READ: METL-SPAN, A DIVISION OF NCI GROUP, INC.
   LEWISVILLE, TEXAS
   DADE COUNTY PRODUCT CONTROL APPROVED
9. ALL SCREWS SHALL BE CORROSION RESISTANT SELF DRILLING SCREWS.
10. THE SUPPORTING STRUCTURE, OVER WHICH THE PANELS ARE TO BE INSTALLED, MUST BE MINIMUM 14 GAGE (MIN. 0.075") STEEL WITH MIN. Fy = 50 KSI.
11. THESE WALL PANELS SHALL NOT BE CONSIDERED TO OR BE USED FOR TRANSFER OF DIAPHRAM ACTION OF WALL TO SUPPORTING STRUCTURE.

PRODUCT RENEWED
as complying with the Florida Building Code
Acceptance No 18-0212.02
Expiration Date 03/06/2023
By Miami Dade Product Control

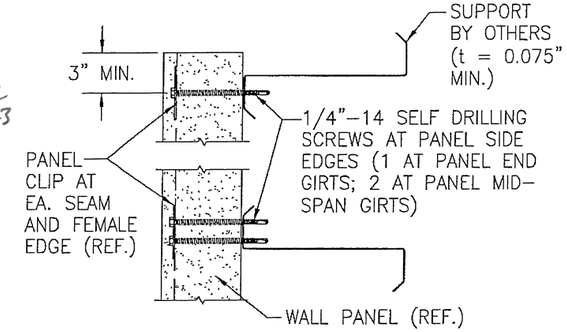


SECTION B
SCALE: 1/2 FULL

| ALLOWABLE PRESSURE POSITIVE OR NEGATIVE (PSF) | | |
|---|---|---|
| SPAN (IN.) | SINGLE SPAN | THREE OR MORE SPANS |
| 48 | 86.0 | 86.0 |
| 54 | 76.4 | 76.4 |
| 60 | 68.8 | 68.8 |
| 66 | 62.5 | 62.5 |
| 72 | 57.3 | 57.3 |
| 78 | 52.9 | 52.9 |
| 84 | 49.1 | 49.1 |
| 90 | 44.9 | 45.9 |
| 96 | 37.0 | 43.0 |

PRODUCT REVISED
as complying with the Florida Building Code
Acceptance No 17-0727.05
Expiration Date 03/06/2018
By Miami Dade Product Control

BALA SOCKALINGAM LICENSE No 62240 STATE OF FLORIDA PROFESSIONAL ENGINEER
8.17.2017

| NO. | REVISION DESCRIPTION | BY | DATE |
|---|---|---|---|
| A | REVISE GENERAL NOTES 1 | BS | 7.14.17 |

DRAWN BY: B.S | CHECKED BY: R.H.
PLOT: 1=8 | DATE: 5/11/15

DRAWING TITLE: CF-42 & TUFF WALL PANEL

MANUFACTURER: METL-SPAN, A DIVISION OF NCI GROUP, INC.
1720 LAKEPOINTE DRIVE, SUITE 101
LEWISVILLE, TX 75057
972-221-6656

CONSULTANTS: BALA SOCKALINGAM, PH.D., P.E.
1216 N LANSING AVE, SUITE C
TULSA, OK 74106
PHONE: 918-492-5992 FAX: 866-366-1543

DRAWING NO. C2026 | REV. A
SHEET NO. 1 OF 2

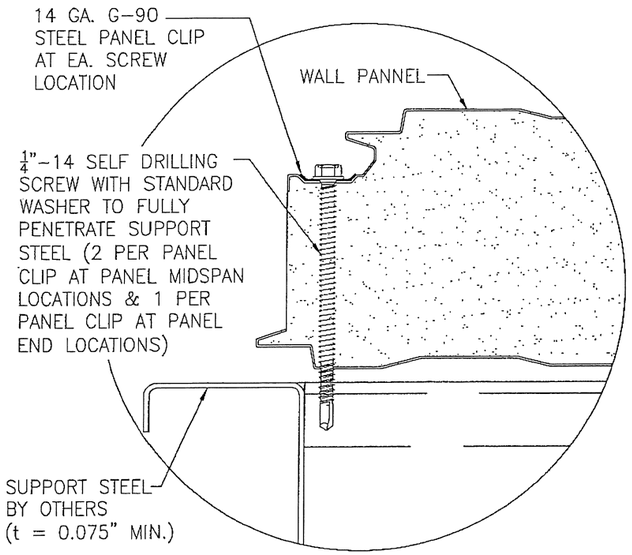


MALE EDGE DETAIL

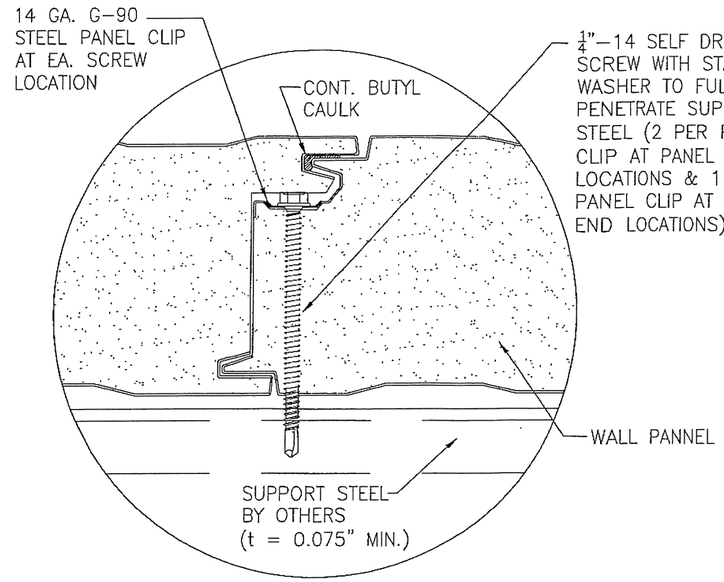


SEAM DETAIL

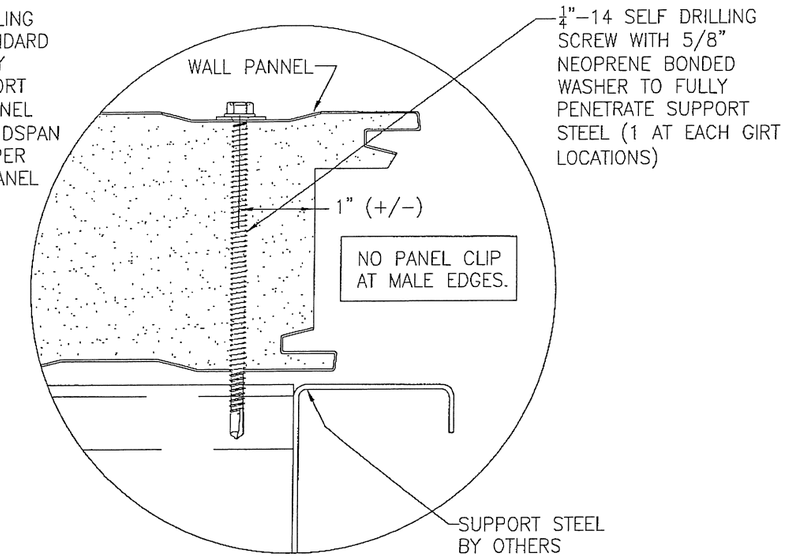


FEMALE EDGE DETAIL

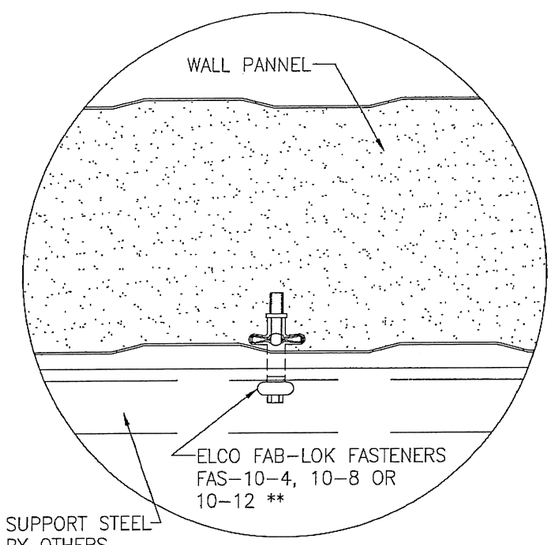


FAB-LOK DETAIL

** IN LIEU OF FAB-LOK, SFS INTEC BULB-TITE RIVETS (1194719 OR 1194721) MAY BE USED.

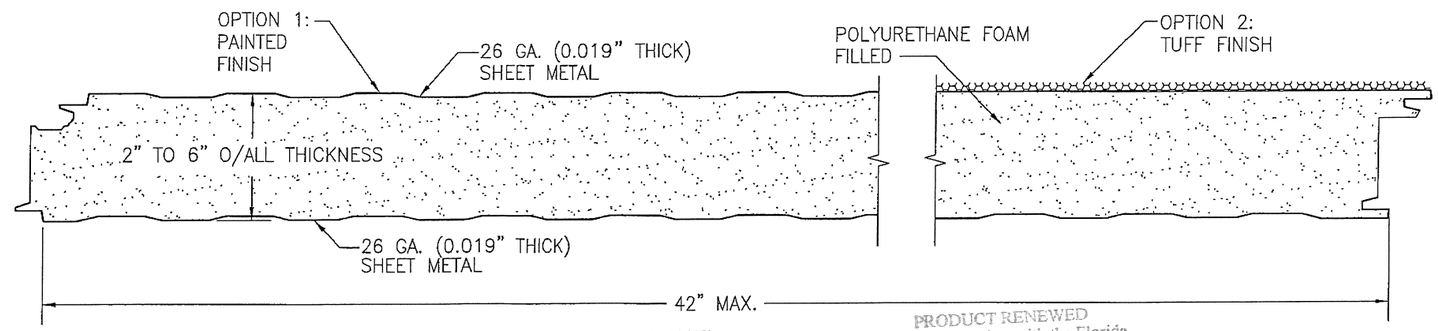


PANEL

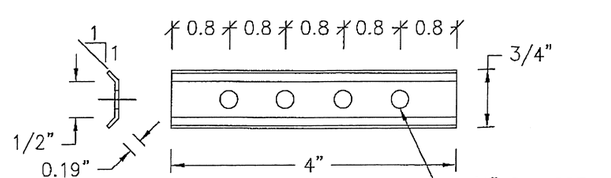


PANEL CLIP
14 GA. (t = 0.075")
33 KSI METAL CLIP

PRODUCT RENEWED
as complying with the Florida
Building Code
Acceptance No 18-0212.02
Expiration Date 03/06/2023
By
Miami Dade Product Control

PRODUCT REVISED
as complying with the Florida
Building Code
Acceptance No 17-0727.05
Expiration Date 03/06/2018
By
Miami Dade Product Control

BALA SOCKALINGAM LICENSE No 62240 STATE OF FLORIDA PROFESSIONAL ENGINEER
8.17.2017

| DRAWN BY: B.S | CHECKED BY: R.H. |
|---|---|
| PLOT: 1=1 | DATE: 5/11/15 |

| NO. | REVISION DESCRIPTION | BY | DATE |
|---|---|---|---|
| | | | |

DRAWING TITLE: CF-42 & TUFF WALL PANEL

MANUFACTURER: METL-SPAN, A DIVISION OF NCI GROUP, INC.
1720 LAKEPOINTE DRIVE, SUITE 101
LEWISVILLE, TX 75057
972-221-6656

CONSULTANTS: BALA SOCKALINGAM, PH.D., P.E.
1216 N LANSING AVE, SUITE C
TULSA, OK 74106
PHONE: 918-492-5992 FAX: 866-366-1543

DRAWING NO. C2026 REV.

SHEET NO. 2 OF 2