FW-120 Wall Panel
Optional Window / Louver Jamb
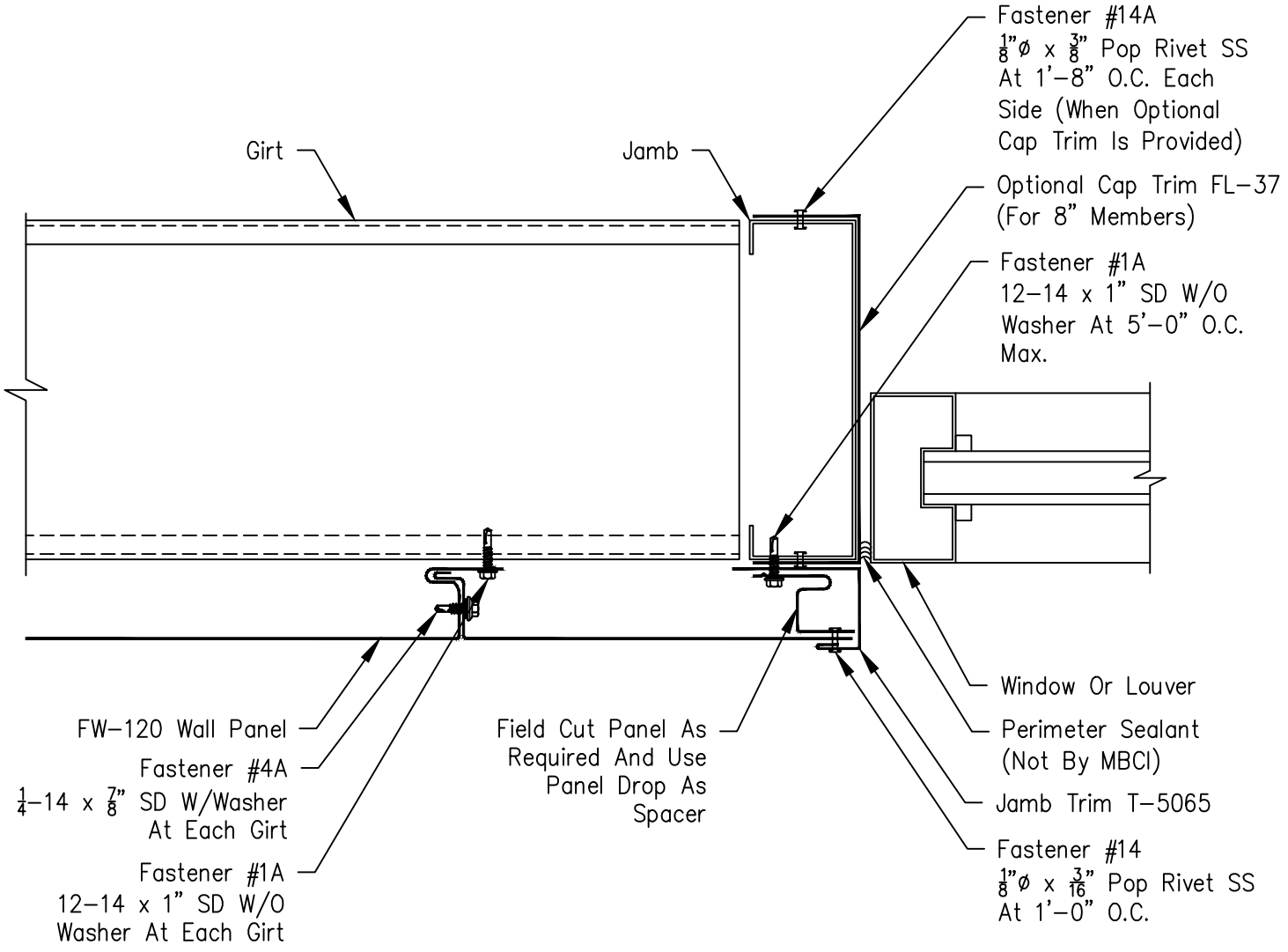
Page	
FW-G-JB-03	
Date	Rev
Jan '20	03