FW-120 Wall Panel
Framed Opening Jamb
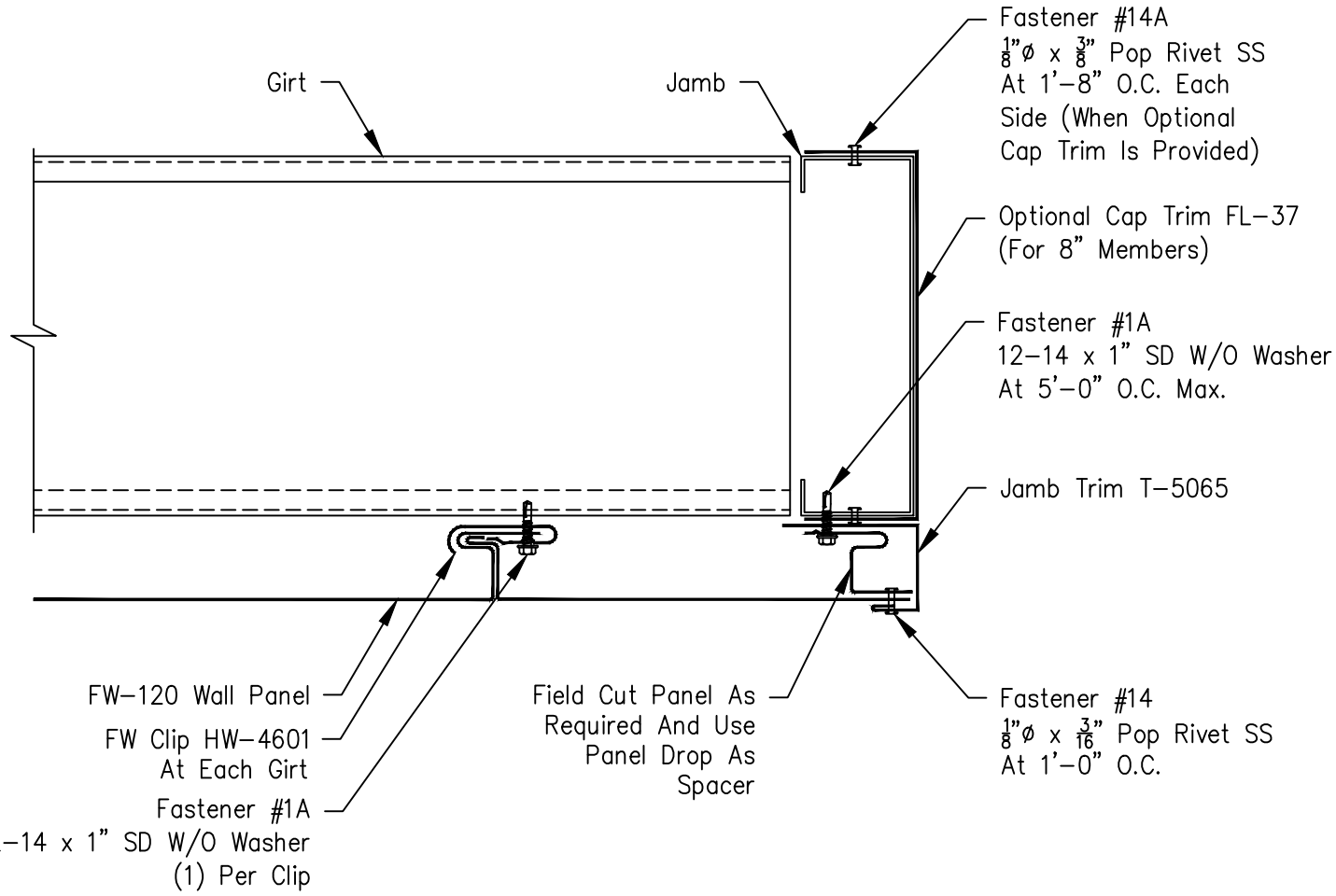
Page	
FW-G-JB-11	
Date	Rev
Jan '20	01