FW-120 Wall Panel
Optional Window / Louver Sill
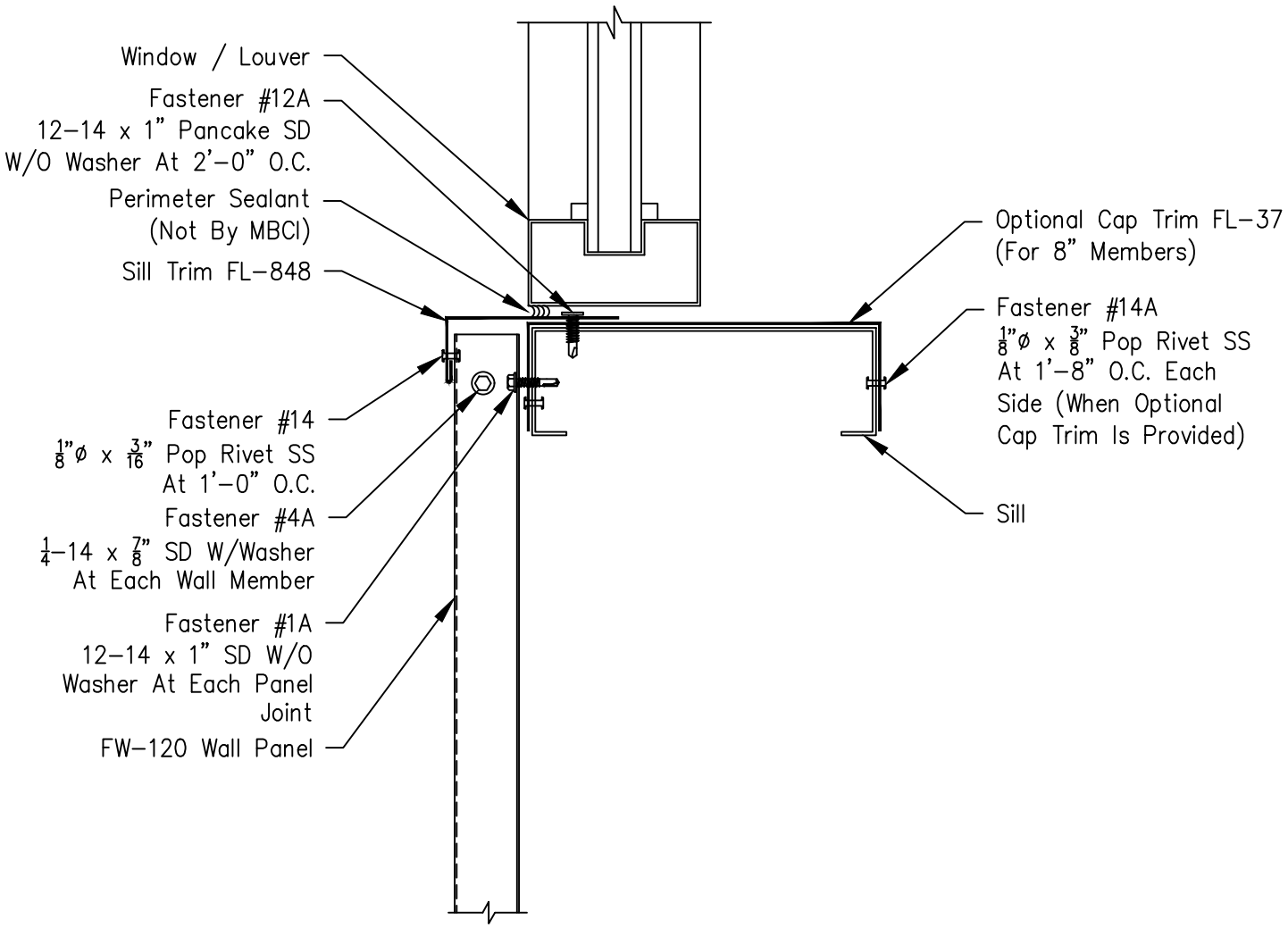
Page	
FW-G-SILL-02	
Date	Rev
Jan '20	03