FW-120 Wall Panel
Sill With Soffit
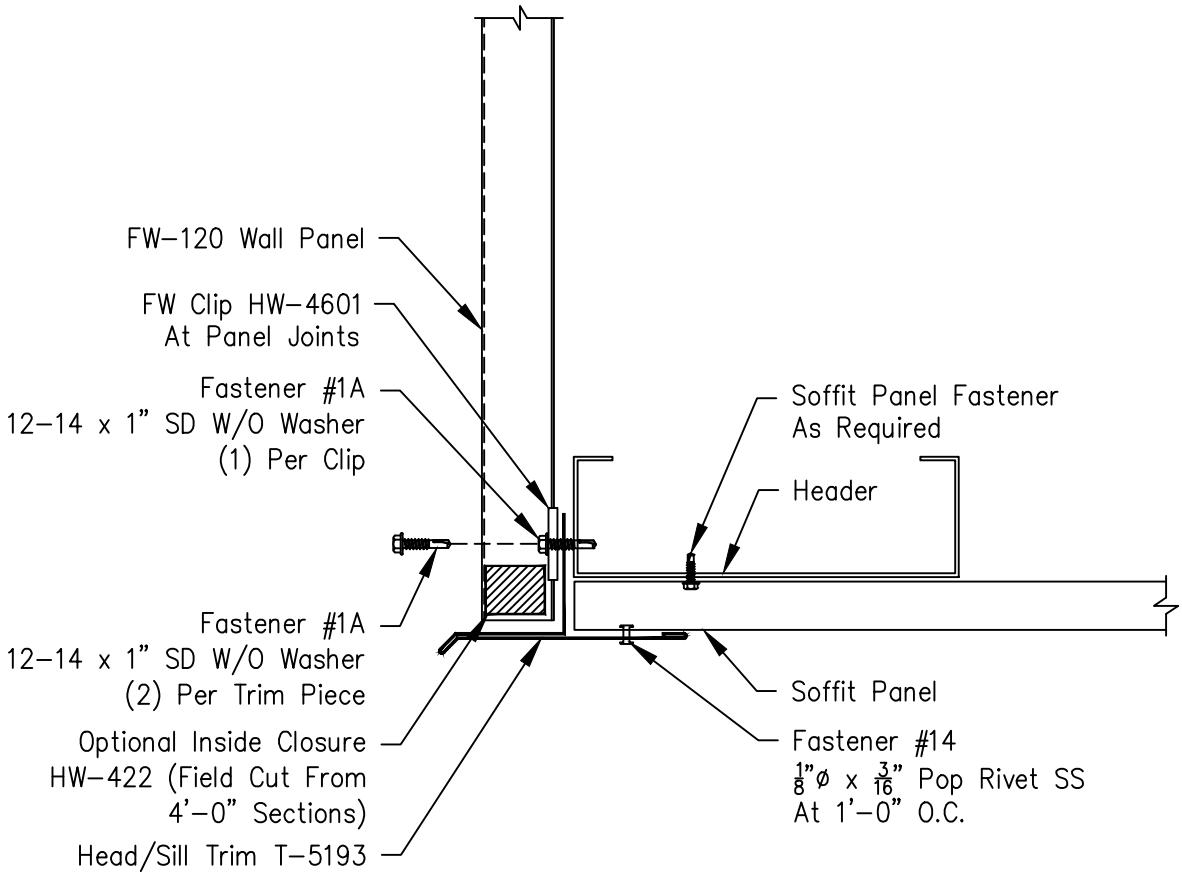
Page	
FW-G-SILL-11	
Date	Rev
Jan '20	01