FW-120 Wall Panel
Window / Louver Sill
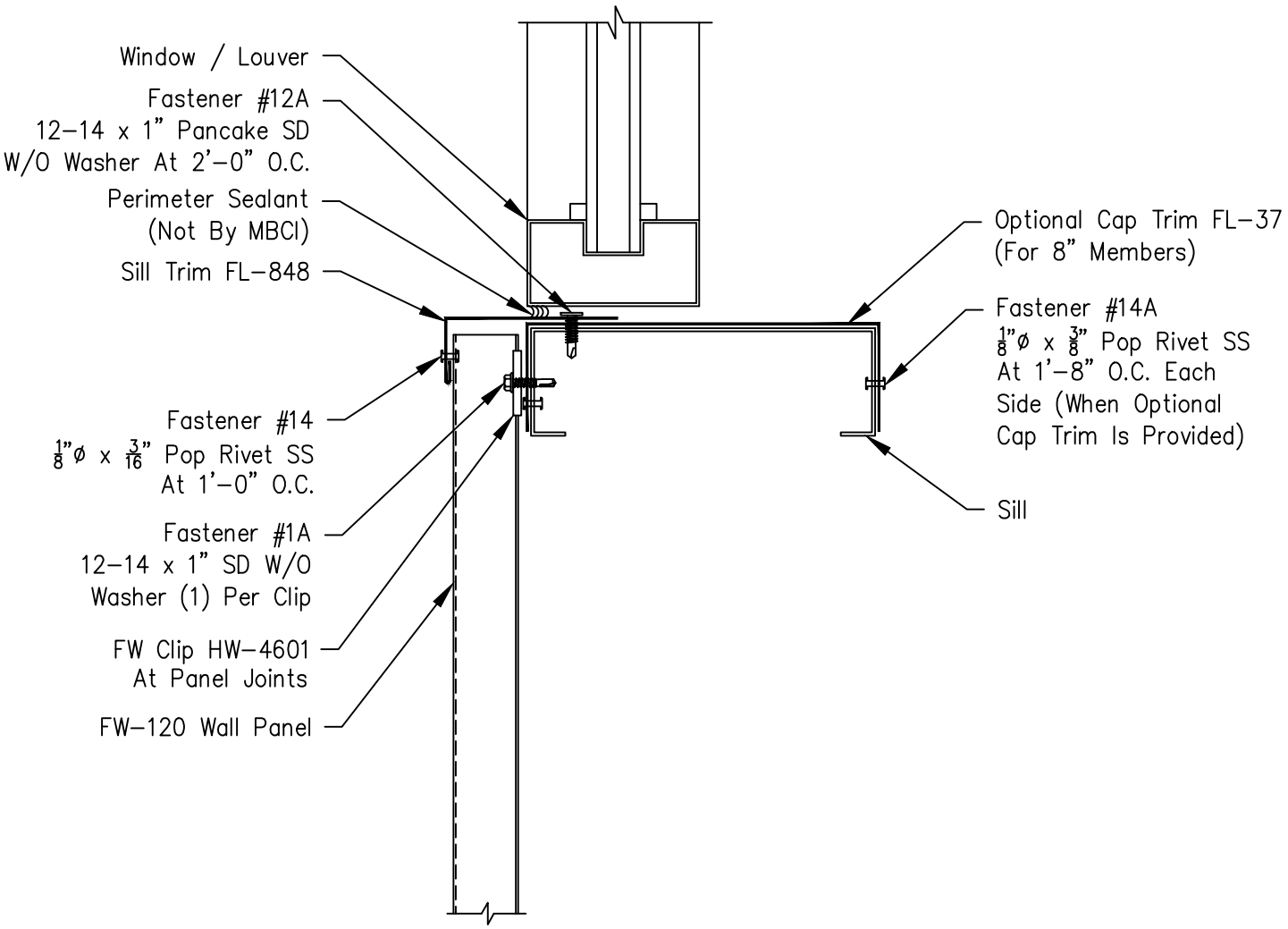
Page	
FW-G-SILL-12	
Date	Rev
Jan '20	01