FW-120 Wall Panel
Optional Panel Splice
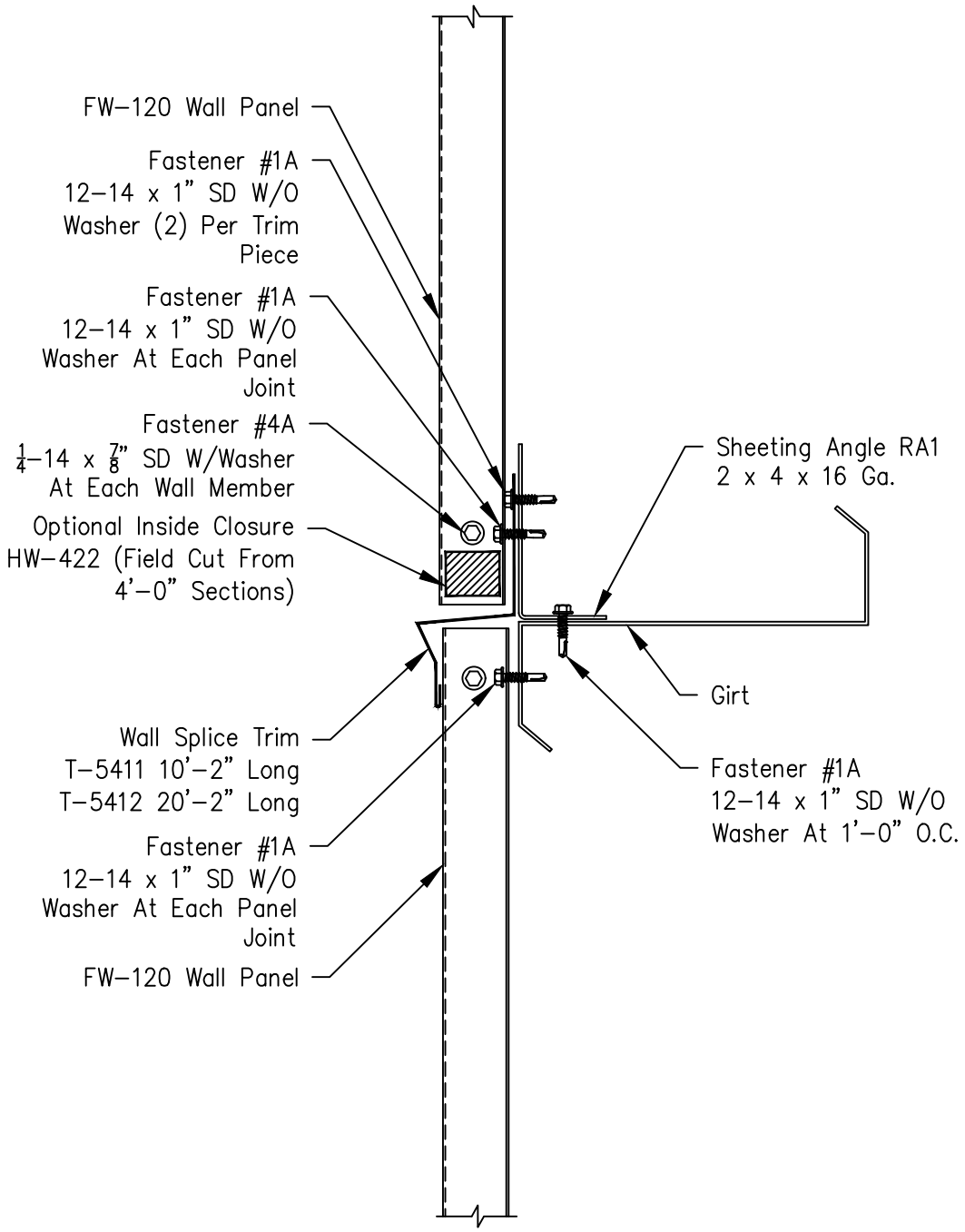
Page	
FW-G-SP-01	
Date	Rev
Jan '20	03