Horizontal FW-120 Wall Panel
Base With Sheeting Notch And Trim
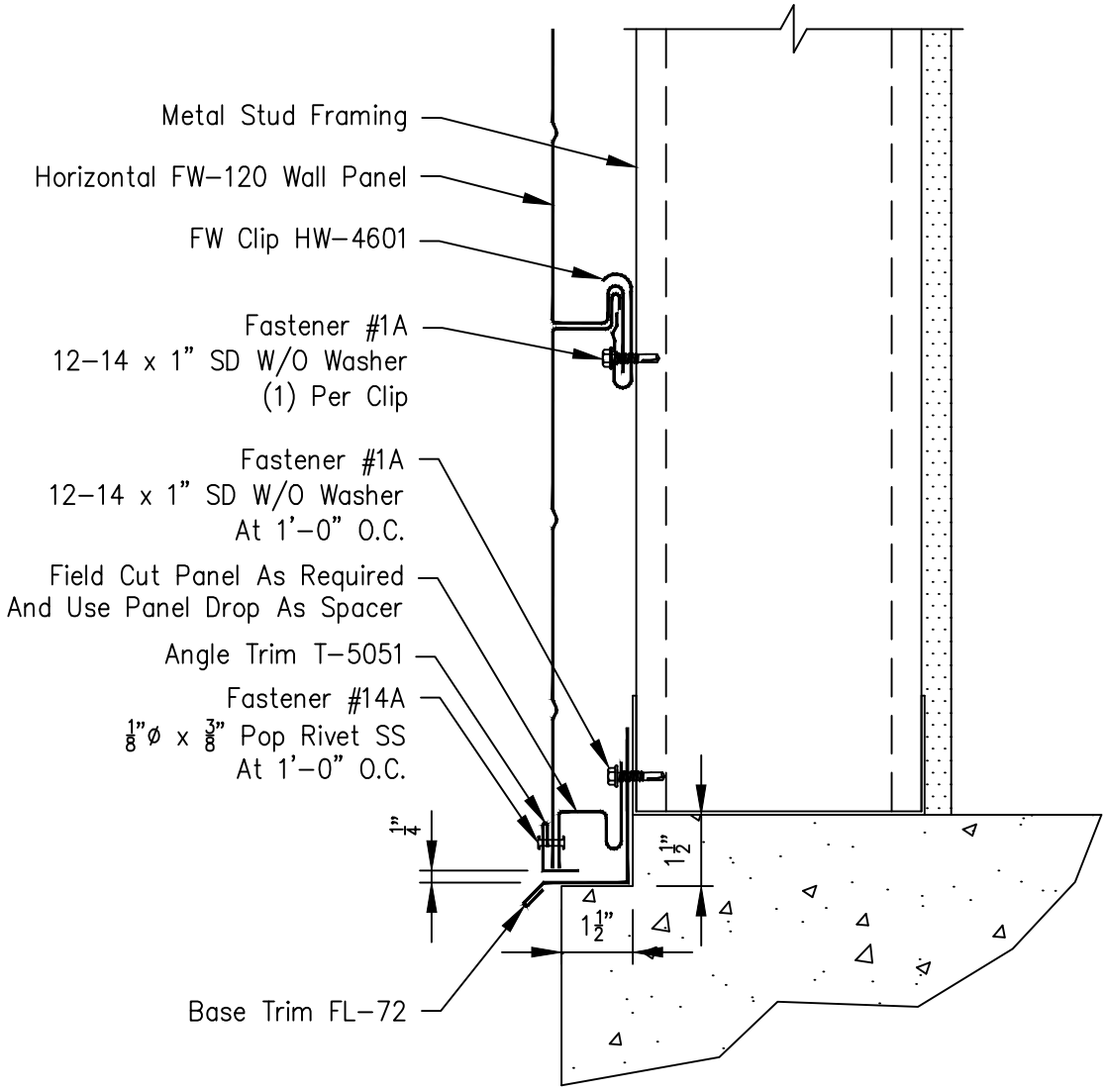
Page	
FW-H-BA-11	
Date	Rev
Jan '20	01