Horizontal FW-120 Wall Panel
Window / Louver Head
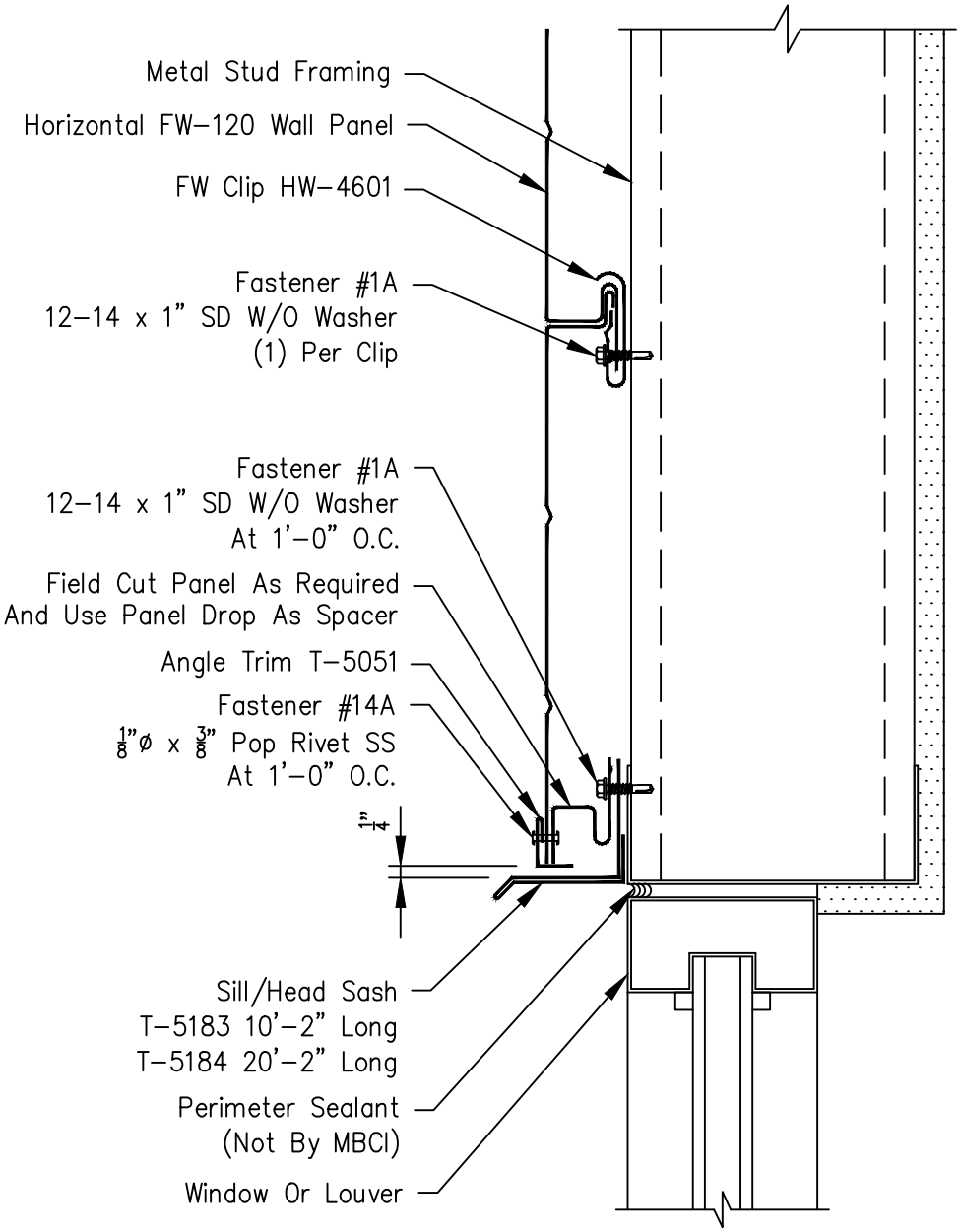
Page	
FW-H-HD-11	
Date	Rev
Jan '20	01