Horizontal FW-120 Wall Panel
Walk Door Jamb
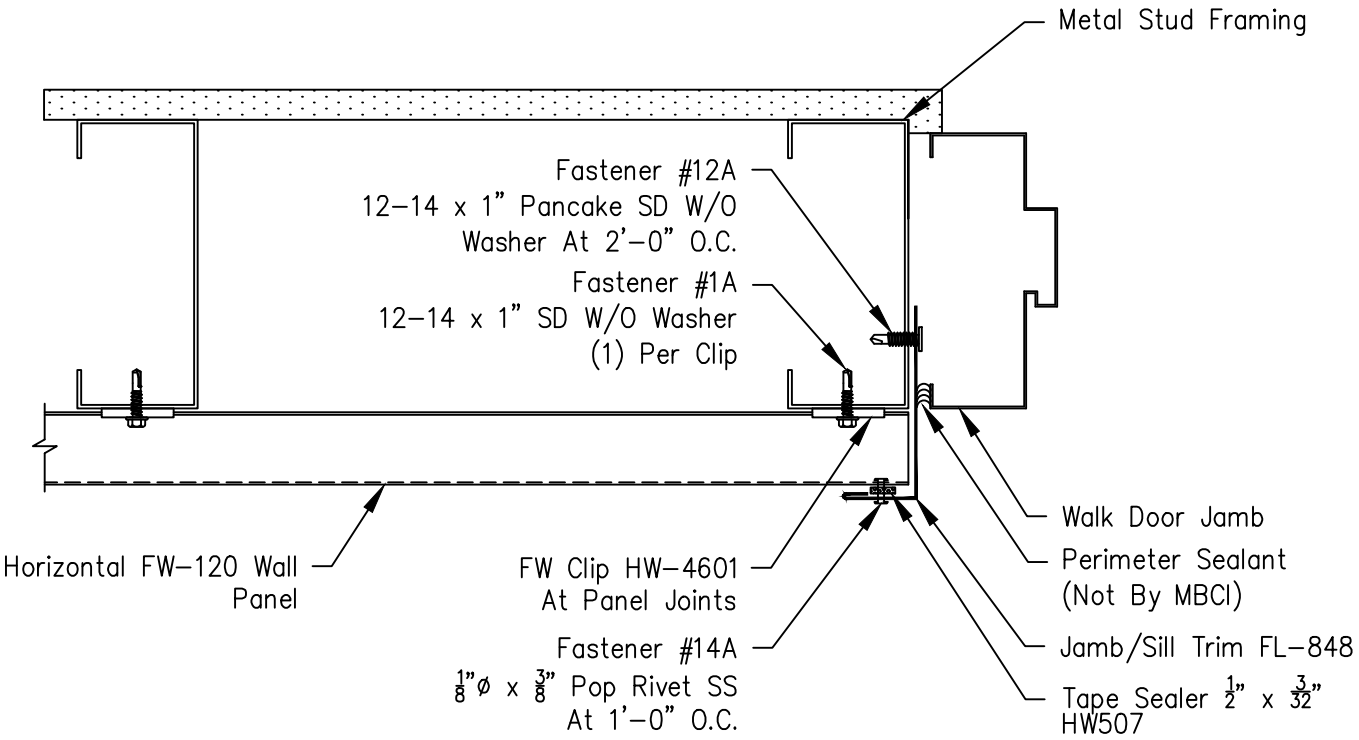
Page	
FW-H-JB-12	
Date	Rev
Jan '20	01