Horizontal FW-120 Wall Panel
Panel Splice
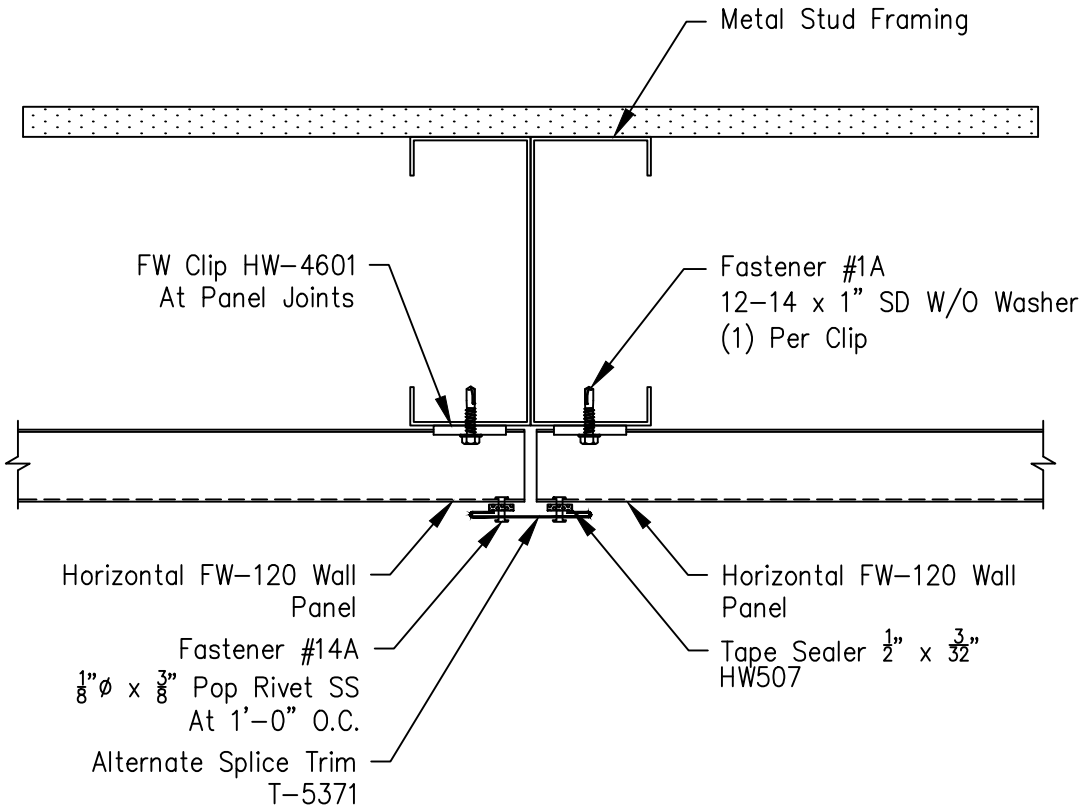
Page	
FW-H-SP-11	
Date	Rev
Jan '20	01